4HP JUMPING RAMMER

ITEM # 61070

OWNER'S MANUAL AND SAFETY INSTRUCTIONS

SAVE THIS MANUAL. KEEP THIS MANUAL FOR SAFETY WARNINGS, PRECAUTIONS, ASSEMBLY, OPERATION, INSPECTION, MAINTENANCE AND CLEANING PROCEDURES. WRITE THE PRODUCT'S SERIAL NUMBER ON THE BACK OF THE MANUAL, OR THE MONTH AND YEAR OF PURCHASE IF PRODUCT HAS NO SERIAL NUMBER

FOR QUESTIONS, PLEASE CALL CUSTOMER SERVICE: 909.628.4900

Drive motor	Honda GXR120 4HP with EPA
	GXR 120
Displacement (ml)	121
Operating weight (mass)	172lbs
Percussion rate (l/min)	600
Walk Speed(m/min)	17
Leap Height(mm)	65
Engine speed(r/min)	3600
Tank capacity (L)	2.2
Ramming System ml (oz.) Capacity	890

Applications

Rammers are designed to compact loose soils and gravel to prevent settling and to provide a firm, solid base for the placement of footings, concrete slabs, foundations, and other structures.

Description of Components

The engine, which is flanged to the crankcase and is held in place by 4 screws. Drives the spring system over a gear transmission and a connecting rod. The engine torque is transmitted by means of a centrifugal clutch.

The centrifugal clutch interrupts the flow of power to the spring system at low engine speeds, thus allowing for a perfect idling of the engine. The drive engine works according to the 4-stroke principle, and is started mechanically by means of a recoil starter. The engine is air cooled and the air necessary for combustion is directed through the air filter.

WARNING

Read all safety warnings and instructions. Failure to follow the warnings and instructions may result in injury and/or property damage. Save all warnings and instructions for future reference.

The warnings, precautions, and instructions discussed in this instruction manual cannot cover all possible conditions and situations that may occur. It must be understood by the operator that common sense and caution are factors which cannot be built into this product, but must be supplied by the operator.

Familiarity and proper training are required for the safe operation of equipment! Equipment operated improperly or by untrained personnel can be dangerous! Read the operating instructions contained in both warning this manual and the engine manual and familiarize yourself with the location and proper use of all controls. Inexperienced operators should receive instruction from someone familiar with the equipment before being allowed to operate the machine.

• Never allow anyone to operate this equipment without proper training.

• Never touch the engine or muffler while the engine is on or immediately after it has been turned off. These areas get hot and may cause burns.

• Never tamper with or disable the function of operating controls.

• Never use choke to stop engine.

• Never operate the machine in areas where explosions may occur. Always read, understand, and follow procedures in Operator's Manual before attempting to operate equipment.

• Always wear protective clothing appropriate to the job site when operating equipment.

• Always wear hearing protection when operating equipment.

• Always be sure the rammer will not tip over, roll, slide, or fall when not being operated.

• Always turn the engine OFF when the rammer is not being operated.

• Always guide the rammer in such a way that the operator is not squeezed between the rammer and solid objects. Special care is required when working on uneven ground or when compacting coarse material. Make sure to stand firmly when operating the machine under such conditions.

• Always operate the rammer in such a way that there is no danger of it turning over or falling in, when working near the edges of breaks, pits, slopes, trenches and platforms.

• Always close fuel valve on engines equipped with one when machine is not being operated.

Operator Safety while using Internal Combustion Engines

• Do not smoke when refueling engine.
• Do not refuel hot or running engine.
• Do not refuel engine near open flame.
• Do not spill fuel when refueling engine.
• Do not run engine near open flames.
• Do not run machine indoors or in an enclosed area such as a deep trench unless adequate ventilation.
• ALWAYS refill fuel tank in well-ventilated area.
• ALWAYS check fuel lines and fuel tank for leaks and cracks before starting engine.

Service Safety

• Poorly maintained equipment can become a safety hazard. In order for the equipment to operate safely and properly over a long period of time, periodic maintenance and occasional repairs are necessary.

• Do not operate engine without air cleaner.

• Do not remove air cleaner cover, paper element, or pre-cleaner while engine is running.

• ALWAYS replace worn or damaged components.

• Do not crank a flooded engine with the spark plug removed on gasoline-powered engines. Fuel trapped in the cylinder will squirt out the spark plug opening.

• Do not use gasoline or other types of fuels or flammable solvents to clean parts.

• Always replace safety devices and guards after repairs and maintenance.

• Always keep area around muffler free of debris such as leaves, paper, cartons, etc. A hot muffler could ignite them, starting a fire.

• Always do Periodic Maintenance as recommended in Operator’s Manual.

• Always disconnect spark plug on machines equipped with gasoline engines, before servicing, to avoid accidental start-up. Always keep machine clean and labels legible. Replace all missing and hard-to-read labels. Labels provide important operating instructions and warn of dangers and hazards.

PRE-OPERATION

1. For new or long storage machines, oil sealed in the cylinder must be removed first. The removing method: Take off the spark plug, use the lift thumb to stop the spark plug hole and pull the starter with strength to spray the oil out.

2. Check the sparks of the spark plug. Normally the sparks should be blue.

3. Check if the air cleaner is clean. Dirty air cleaner will influence the volume of incoming air that can cause the bad performance of the engine.
4. DO NOT place on rammer on loose soil or gravel.

1. Adding fuel. This gasoline engine is the type of single-cylinder and 4-stroke. The fuel is No.90 gasoline or above.

2. As Fig. 1, if the engine is cold, close choke on the carburetor. Occasionally, warm engines will need to be choked. Move throttles control to 1/4 to 1/2 of the full position (c3). Pull the starter rope until the engine starts, or attempts to start.

Note: First time use, engines recently serviced, run out of fuel or not used for long periods of time may need the rope to be pulled more times to move fuel to the carburetor.

Open choke (b2) on the carburetor as the engine warms up, or, if it attempts to start, continue pulling the rope until it starts.

Note: A cold engine should be allowed to warm up at the idle position (c2) for approximately one (1) minute. Failure to open the choke after the engine attempts to start may cause flooding.

New machine should not work at full open position within the first 4 hours. Thus enabling the engine to have a good match and do reliable job.

- The engine should run without load for 3-5 minutes after start and before stop. It is strictly prohibited that the engine runs at high speed without load in order to avoid the damage of the engine parts and the harm of body. It is also strictly prohibited to stop the engine suddenly at high speed.
- To prevent fire, the engine must be stop and be far away from fire source when adding fuel. Smoking is strictly prohibited.

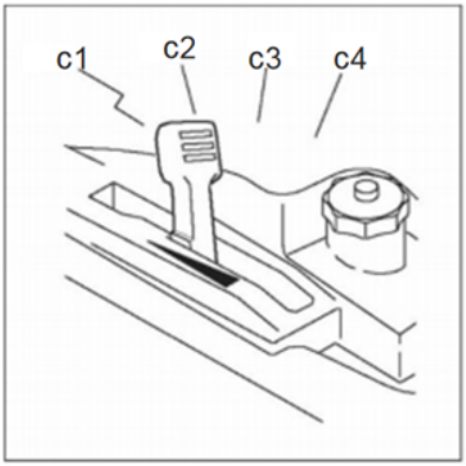

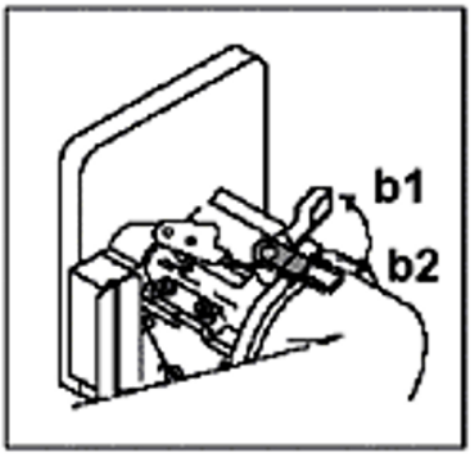

Stop of Engine

Fig.1

Place throttle in the idle position (c2).

Shut off the engine by moving the throttle through to the off position (c1). The engine will stop and the fuel valve will close.

If the throttle control wire should break, keep pressing the stop button (d) until the engine stops completely (Fig. 1).

The sudden stoppage of the engine during high-speed operation may cause the engine trouble; therefore, avoid it except for the emergency case.

Operation

Keep vibratory rammer clean and dry. Avoid no-load strokes. Never allow the rammer to run full throttle when forcing away material or when lifting the equipment.

CAUTION: To prevent damage to the rammer, do not allow the rammer to run on its side.

If the rammer should tip on its side, place the rammer in the position shown (Fig. 2), then shut off the engine by moving the throttle control lever through to the off position.

Fig. 2

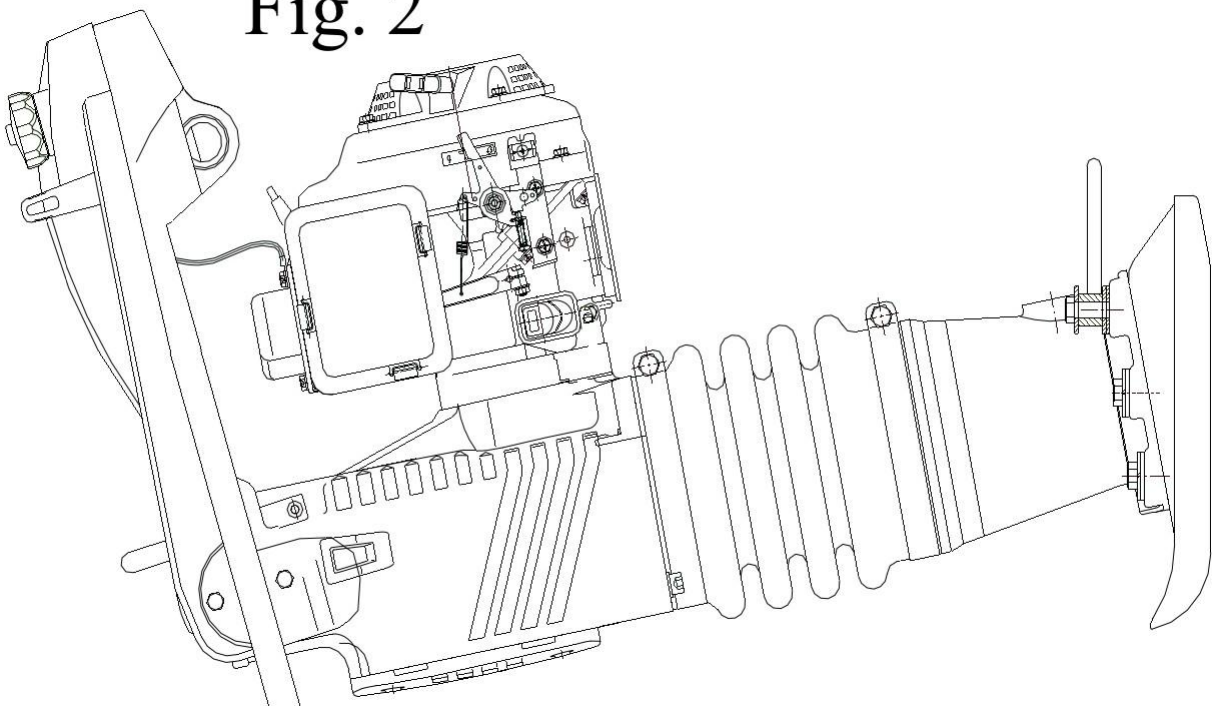

Run rammer at the full throttle position (a4) for maximum performance (Fig. 3).

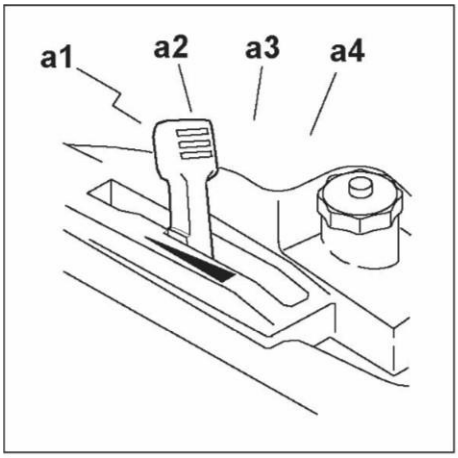

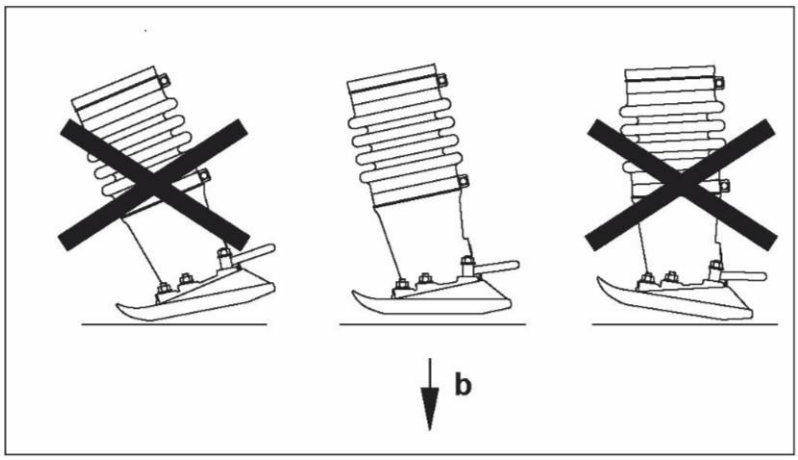

Guide rammer with its handle. Allow machine to pull itself forward. DO NOT try to over-power the machine.

For best compaction, the shoe must hit the ground flat (b), not on its toe or heel. This will save on excessive shoe wear.

Technical Maintenance and Long Time Storage checks According to the conditions and frequency of use, rammers have to be checked for safe operation at least once a year by skilled technicians, and have to be repaired if necessary.

	Daily Before starting	After first5 hours	Every week or 25 hours	Every month Or 100 hours	Every 3 Months Or 300 hours	Every Year
Check fuel level.	•					
Check engine oil level.	•					
Inspect air filter. Replace as needed.	•					
Check oil level in sightglass.	•					
Check fuel line and fittings for cracks or leaks.	•					
Tighten ramming shoe hardware.		•	•			
Check and tighten external hardware.		•	•			
Clean engine cooling fins.			•			
Clean and check spark plug gap.			•			
Change engine oil.				•		
Replace spark plug.				•		
Clean recoil starter.					•	
Change ramming system oil.*					•	
Inspect crane lifting cable for wear, damage, or abuse.					•	
Inspect fuel filter.						•
Change ramming system oil after first 50 hours of operation.* ***Note**: If engine performance is poor; check, clean,and replace air filter elements as needed.*						

Fuel system maintenance

Water or dirt in fuel is one of the main cause of the engine trouble, clean the fuel system regularly.

Residual fuel remaining in the fuel tank and carburetor for long time will gum and clog the fuel system, thus cause the engine not to working properly. So all of the fuel should be discharged if the machine isn't used after one week.

NEVER use gasoline or other types of low flash point solvents for cleaning the air cleaner. A fire or explosion could result.

CAUTION: NEVER run engine without air cleaner. Severe engine damage will occur.

The rammer is equipped with a dual element air cleaner. Under normal operating conditions, elements should be cleaned once every week. Under severe, dry and dusty conditions, the elements should be maintained daily. Replace an element when saturated with dirt that cannot be removed. Clean elements using the following procedure.

(1) Remove air cleaner cover (a). Remove cleaner and paper element and inspect them for holes or tears. Replace if damaged.
(2) Cleaner (b): Clean with low-pressure compressed air. When very soiled, wash in solution of mild detergent and warm water. Rinse thoroughly in clean water. Allow to dry thoroughly before reinstalling.

(3) Paper element (c): Tap element lightly to remove excess dirt.

Replace paper element if it appears heavily soiled.

(4) Wipe out filter housing (d) with a clean cloth

CAUTION: DO NOT ALLOW DIRT TO GET INTO THE ENGINE INTAKE PORT WHILE CLEANING, DAMAGE TO ENGINE WILL RESULT.

Plug

Clean stains or carbon off the spark plug and adjust spark gap to 0.6~0.7mm (Fig. 5).

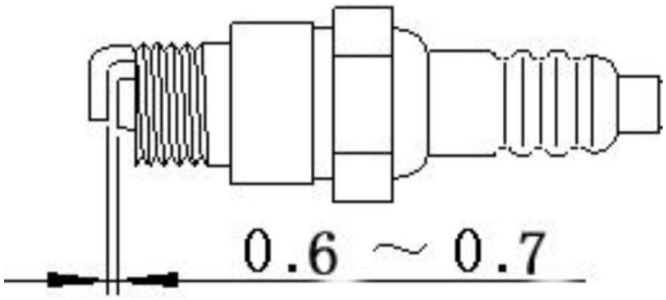

Fig. 5

The plug model of this machine is E4RTC. Do not use other models. If it is necessary for change, have a qualified technician change it.

Change ramming system oil after first 50 hours of operation and every 300 hours thereafter. To drain oil, remove plug (g) and tilt machine back until it is resting on handle (Fig. 6).

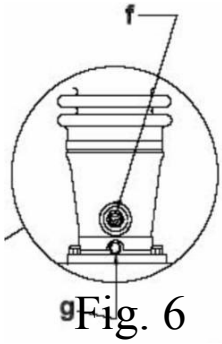

Fig. 6

Note: In the interests of environmental protection, place a plastic sheet and a container under the machine to collect any liquid which drains off. Dispose of this liquid in accordance with environmental protection legislation.

With the rammer on a level surface, add oil through plug. Proper ramming system lubrication is indicated when approximately 1/2-3/4 of the sight glass (f) is full.

Shoe Hardware (Fig. 7)

On new machines, or after replacing shoe, check and tighten shoe hardware (a) after the first 5 hours of operation. Inspect hardware every week thereafter.

Torque hardware as specified.

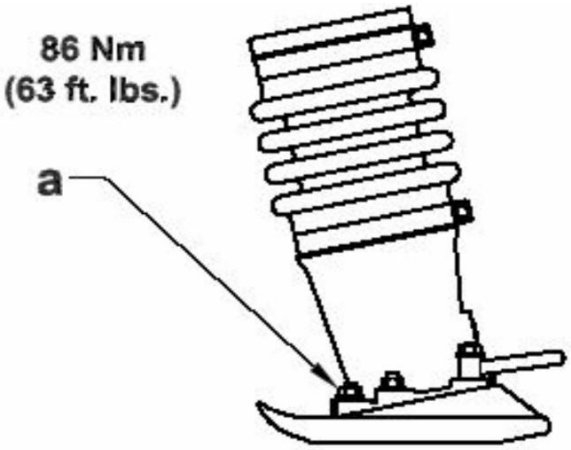

Fig. 7

Carburetor Adjustments

Refer to Technical Data for correct idle and operating rpm. For best accuracy, use a tachometer when making carburetor adjustments. Start engine and allow it to warm up to operating temperature. Set engine idle speed with engine running at idle and choke fully open. Adjust idle speed screw, in or out, to obtain correct idle speed.

CAUTION: DO NOT turn the adjusting screw in too tight or you may damage the carburetor.

Long time storage

Clean the machine and apply anti-rust oil to metal parts.

Remove the chemical tank, clean the dust gate and inside and outside of chemical tank, then install the tank and leave the lid loose.

Discharge fuel in the tank and carburetor entirely. Cover the machine with plastic dust coat and store it in a dry and clean place.

Transportation

Always shut off engine and close fuel valve when transporting machine.

Make sure lifting device has enough capacity to hold machine (see identification plate on machine for weight).

Use central lifting point when lifting machine.

Always inspect crane lifting cable for wear, damage, or abuse. Protect cable from any sharp edges.

Do not use if there are any signs of cut wires, excessive wear, or other defects. Replace damaged cable immediately to avoid injury or death.

Tie down machine on vehicle to prevent it from tipping, falling, or rolling. Lay machine down flat**.**

CAUTION: Drain fuel tank as required to prevent fuel leaking from cap.

Problem		Cause	Remedy
No flash	Spark plug	1.Poles wet	Dry it
		2.Covered with carbon	Clean the carbon
		3.The insulation damaged	Replace
		4.Spark gap incorrect	Adjust 0.6~0.7mm
		5.The poles burned	Replace
	Magneto	1. The wrap of wire damaged.	Remedy or replace
		2.Insulation of coil bad	Replace
		3. The wire of coil broken.	Replace
		4.The electronic firing unit defective	Replace
Nomal	Compression ratio and fueling well	1.Too much fuel in cylinder.	Drain
		2.Water or dirt in fuel	Replace
	Fueling well but compressio n ratio bad	1.Cylinder and piston ring wore or tore	Replace them
		2.The plug loose	Tighten it
	Carburetor not fueling	1.No fuel in tank	Fuel
		2.Fileter gauze clogged	Clean
		3.The air hole of the tank clogged	Clean

Engine lacks power

Problem	Cause	Remedy
The compression ratio is fine	1. The filter plate clogged	clean
	2.Air passes through the connection of carburetor	Tighten
	3.Engine overheat	Stop the engine and cool it
	4.Water in fuel	Refill with fresh fuel
	5.The carbon clogs muffler	Clean
Engine overheats	1.gas (fuel) thin	Adjust the carburetor.
	2.Cylinder covered with carbon	
	3.Oil bad	
	4.No connection with hose	
Engine noisy or knocking	1.Fuel bad	Replace
	2.Carbon in cylinder	Clean
	3.The running parts wore and tore.	Check and replace

Engine stops while running

Problem	Cause	Remedy
Engine stops suddenly	1.The lead wire of plug loose	Replace firmly
	2.Piston bitten	Change or remedy
	3.Plug covered with carbon	Clean plug
	4.Fuel used up	Fill the fuel tank
The engine stops slowly	1.Carburetter clogged	Clean
	2.The air hole in the tank clogged	Clean
	3.Water in fuel	Refill with fresh fuel.

Engine hard to stop

Problem	Cause	Remedy
Throttle handle put to the lowest position, the engine still runs	The throttle cord is short or piston of carburetter blocked.	Adjust the cord or remedy the carburetter

Ramming abnormality

Problem	Cause	Remedy
The compression ratio is fine	1. The filter plate clogged	Clean
	2.Air passes through the connection of carburetor	Tighten
	3.Engine overheat	Stop the engine and cool it
	4.Water in fuel	Refill with fresh fuel
	5.The carbon clogs muffler	Clean
Engine overheats	1.gas (fuel) thin	Adjust the carburetor.
	2.Cylinder covered with carbon	Clean
	3.Oil bad	Use better oil..
	4.No connection with hose	Correctly assemble the machine
Engine noisy or knocking	1.Fuel bad	Replace
	2.Carbon in cylinder	Clean
	3.The running parts wore and tore.	Check and replace

Fig RAMMER body parts

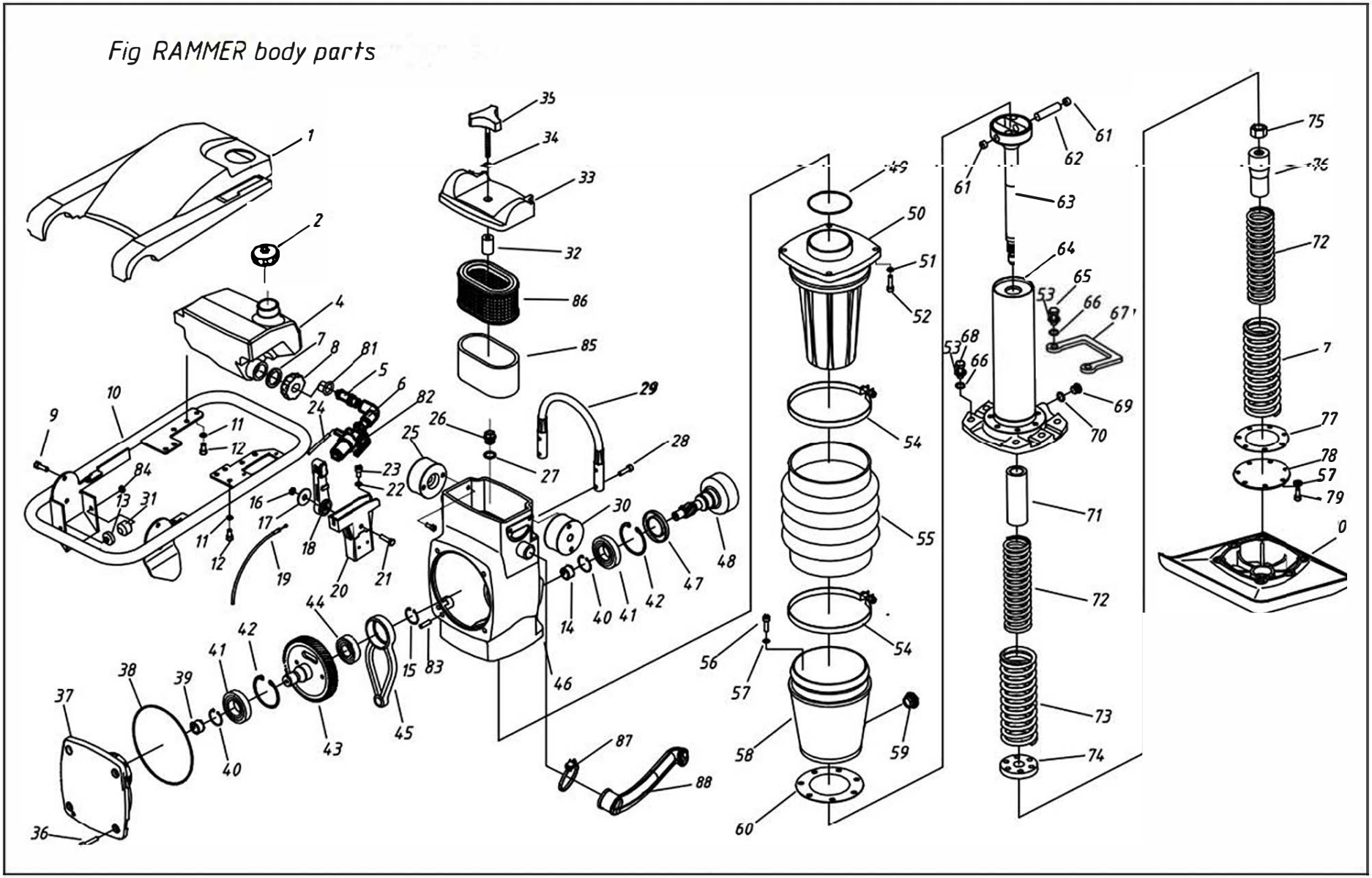

Appendixest of RAMMER body Parts

SER.NO	PART NO.	PART NAME	QTY.	SER.NO	PART NO.	PART NAME	QTY.	SER.NO	PART NO.	PART NAME	QTY.	SER.NO	PART NO.	PART NAME	QTY.
1	B80.1.2	Cover	1	23	GB/T5783	Screw M6X12	2	45	B80.3-6	Connecting rod	1	67	B80-10	Handle-lifting	1
2	B80A.U.1-1	Cap-fuel tank	1	24	B80.1.5-1	Hose	1	46	B80A.2-1	Crankcase	1	68	GB/T5783	Screw M12X^0	4
				25	B80A.1.2	Shockmount	1	47	B80.3.1	seal-shaft	1	69	B80.^-13	Plug	1
4	B80.1.5.1	Fuel tank	1	26	B80.3-2	Plug	1	48	B80B.2-2	Clutch drum	1	70	016	Ring-sealing	1
5	B80B.1.3-1	out of the nozzle	1	27	B80.3-3	Seal-ring	1	49	GB/T3452.1	O-Ring 97.5X3.556	1	71	B80A-6	Bushing	1
6	1/8x1/8	Elbow	1	28	GB/T70.1	Screw M8X35	4	50	HCRW-3	Cylinder-guide	1	72	B80A-5	Little springs	2
7	B80.1.5-3	Gasket	1	29	B80.2	Handle-crane lift	1	51	GB/T93	Washer 10	4	73	B80.4-4	Big springs	2
8	B80.1.5-4.	Cap	1	30	B80A.1.1	Shockmount	1	52	GB/T70.1	Screw M10X35	4	74	B80.^-B	Guide-piston	1
9	GB/T70.1	Screw M8X12	4	31	HZR96.11	Shockmount	1	53	GB/T93	Spring Washer 12	6	75	GB/T889.1	Nut-lock M20X1.5	1
10	B80.1.6	Guide handle con^l.	1	32	B80.6-2	Screw pipe	1	54	0180x22	Clamp	2	76	B80.^-9	Bushing-impact	1
11	GB/T96	Washer 6	8	33	B80.6-1	Cover	1	55	B80.C-17	Bellows	1	77	B80A-12	Gasket	1
12	GB/T70.1	Screw M6X16	8	34	GB/T3452.1	O-Ring 8X3.55G	1	56	GB/T93	Screw M8X25	7	78	B80.^-11	Cover	1
13	B80A.1-1	Shochnoimt-special	1	35	B80.6.1	Handle-cover	1	57	GB/T70.1	Spring Washer 8	74	79	GB/T70.1	Screw M8X20	7
14	GB/T12764	Bearing-nee (Ue HK1816	2	36	GB/T70.1	Screw M10X25	4	58	B80A-16	Pipe-protective	1	80	B80B.3-1	Kit-ramming shoe	1
15	6B/T894.1	Retaining ring-ext 25	2	37	B80.3-5	Cover-crankcase	1	59	M27,1.5	Sightglass	1	81	B80.1.5-2	Bushing	1
16	GB/T889.1	NutMS	1	38	GB/T3452.1	O-Ring 175X3.55	1	60	B80.^-15	Gasket	1	82	EH12-2D	Valve-fuel	1
17	B80. U-3	Washer	1	39	GB/T12764-	Bearmg-needle HK2520	1	61	B80.C-1	Plug	2	83	GB/T119	Pin B8X16	1
18	B80.U-1	Control-throttle	1	40	GB/T89^.1	Retaffsng ring-ext 35	1	62	B80.^-2	Pin-piston	1		GB/6170	NutM8	1
19	B80A.1.3	Cable-throttle	1	47	GB/T276	Bearing 6207/p6	2	63	B80A-7	Ram	1	85	B80-2	Element-prefilter	1
20	B80. U-2	Mount-ffirottle contra	1		GB/T893.1	Retaffmg ring-ext 12	2	64	B80.4.2	Spring cylinder	1	86	B80.7	Filter-air	1
21	GB/T5780	Screw M8X40	1		B80.3-4	Sear-crank	1	65	GB/T5783	Screw M12X50	2	87		Clamp	1
22	GB/T93	Spring Washer 6	2	44	GB/T276	bearing 6305/p63	1	66	GB/T97.1	Washer 12	8	88	B80-5	Tube-air duct	1

PLEASE READ THE FOLLOWING CAREFULLY

THE MANUFACTURER AND/OR DISTRIBUTOR HAS PROVIDED THE PARTS LIST AND ASSEMBLY DIAGRAM IN THIS MANUAL AS A REFERENCE TOOL ONLY. NEITHER THE MANUFACTURER OR DISTRIBUTOR MAKES ANY REPRESENTATION OR WARRANTY OF ANY KIND TO THE BUYER THAT HE OR SHE IS QUALIFIED TO MAKE ANY REPAIRS TO THE PRODUCT, OR THAT HE OR SHE IS QUALIFIED TO REPLACE ANY PARTS OF THE PRODUCT. IN FACT, THE MANUFACTURER AND/OR DISTRIBUTOR EXPRESSLY STATES THAT ALL REPAIRS AND PARTS REPLACEMENTS SHOULD BE UNDERTAKEN BY CERTIFIED AND LICENSED TECHNICIANS, AND NOT BY THE BUYER. THE BUYER ASSUMES ALL RISK AND LIABILITY ARISING OUT OF HIS OR HER REPAIRS TO THE ORIGINAL PRODUCT OR REPLACEMENT PARTS THERETO, OR ARISING OUT OF HIS OR HER INSTALLATION OF REPLACEMENT PARTS THERETO.

Record Product's Serial Number Here: _____
Note: If product has no serial number, record month and year of purchase instead.

Note: Some parts are listed and shown for illustration purposes only and are not available individually as replacement parts.

Questions, issues or missing parts?

Before returning to your retailer, our customer service team is here to help.

Call Us: 909.628.4900
Email Us: info@starktoolsusa.com

Hours of Operation: 9am - 3pm PST Monday - Friday

MADE IN CHINA